SHAFT TYPE

OSS Model

Advanced Small Model

•Low Starting Torque.

Model

TÜV CE EN 50081-2 EN 50082-2

OSS-□□-□□□-□□-□□□-00E

- Resolution: 006 60 P/R; 015 150 P/R; ※025 250 P/R; ※036 360 P/R; ※05 500 P/R; ※01 100 P/R; ※02 200 P/R; 03 300 P/R; ※04 400 P/R; ※06 600 P/R
- Signals:
  - 1 : Only A Signal
  - 2 : AB90° Phase Difference
  - 2M : AB90° Phase Difference + Index Signal
- Output Mode:
  - No Indication : Voltage Output ※Only for DC+24V
  - C : Open Collector Output
  - HC : Open Collector Output / High Voltage (DC24V,Only for no index signal)
- Power Supply(Vcc):
  - LD:DC+5V~12V Voltage Output(With Diode)※Only for no index signal
  - LC:DC+5V~12V Open Collector Output※Only for no index signal
  - 5R:DC+5V Voltage Output(No Diode)
  - 5C:DC+5V Open Collector Output
  - 12:DC+12V Voltage Output(No Diode)/Open Collector Output
  - 24:DC+24VOpen Collector Output※Only for no index signal
- Cable Length:
  - 050 500mm (Standard)
  - 100 1000mm
  - 300 3000mm
- Complying with RoHS

※2M is available for only types with ※mark

External Dimension

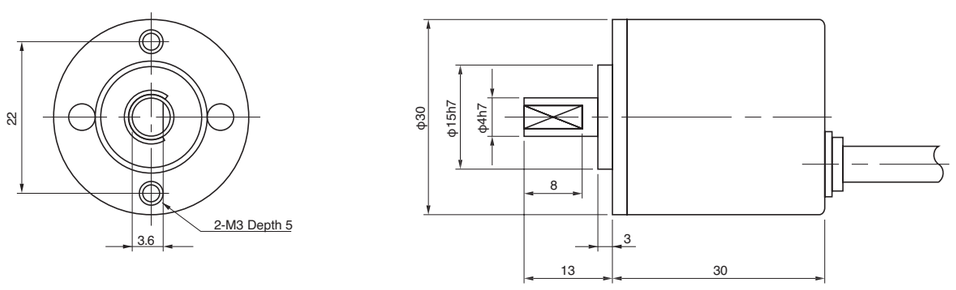

Output Circuit

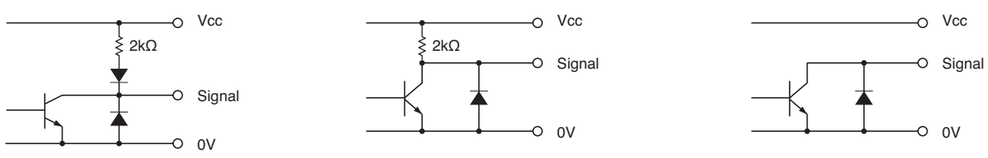

Electrical Spec

TYPE		Voltage Output Type			Open Collector Output Type			
		LD	DC+5V	DC+12V	LC	DC+5V	DC+12V	DC+24V
Power Supply(Vcc)		DC 4.5～13.2V	DC 4.5～5.5V	DC 10.8～13.2V	DC 4.5～13.2V	DC 4.5～5.5V	DC 10.8～13.2V	DC 21.6～26.4V
Current Consumption		40mA Max	80mA Max		40mA Max	60mA Max		
Output Voltage	"H"	Vcc-1V Min			—			
	"L" ※1	0.5 V Max						
Maximum Sink Current		20 mA						
Rise & Fall Time		1μS Max						
Maximum Frequency Response		60 kHz						
Withstanding Voltage of Output Tr.		—			50 V MAX.			

Wave Form

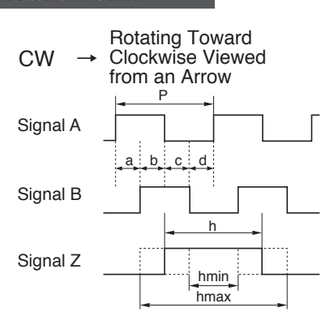

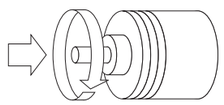

Rising point of A-Signal is always at one point while Z-Signal is at H-Level in CW.

$$P = \frac{1}{\text{Resolution}}$$

$$\frac{P}{2} \leqq h \leqq \frac{3P}{2}$$

$$a, b, c, d = \frac{P}{4} \pm \frac{P}{8}$$

Wave Ratio (Duty); 50 ± 25 (%)

Electrical Connections

Color	Signal
Red	Power Supply(Vcc)
Black	0V
Green or Blue	Signal A
White	Signal B
Yellow	Signal Z
Shield	NC

Mechanical Spec

Starting Torque		9.8×10^{-4}N・m Max
Angular Acceleration		1×10^{5} rad/s^2
Shaft Loading	Thrust	4.9N
	Radial	9.8N
Moment of Inertia		2×10^{-7}kg・m^2
Maximum Permissible Speed		6000min^{-1}
Bearing Life		1×10^{8} / min^{-1} ・hrs
Net Weight		100g Max

Environmental Spec

Operating Temperature	−10˚C～+70˚C
Storage Temperature	−30˚C～+80˚C
Humidity	RH 85% Max No Condensation
Vibration	10～55 Hz / 1.5mm X, Y, Z Each 2h
Shock	490m/s^2,11ms X, Y, Z Each 3 times