HOLLOW TYPE

NOC-H Model

Standard Model of 50mm Diameter Encoder

•Standard Versions of 10～5000 P/R.

Model

NOC-H□□-2M□-□□□-□□□-□00E

Style: H : Hollow Shaft

Resolution

10	10P/R	600	600P/R
20	20P/R	1000	1000P/R
30	30P/R	1024	1024P/R
40	40P/R	1250	1250P/R
50	50P/R	1800	1800P/R
60	60P/R	2000	2000P/R
100	100P/R	2048	2048P/R
200	200P/R	2500	2500P/R
250	250P/R	3600	3600P/R
300	300P/R	4096	4096P/R
360	360P/R	5000	5000P/R
500	500P/R		

Output Mode
- No Indication : Voltage Output
- C : Open Collector Output
- HC : Open Collector Output / High Voltage
- HCP : PNP Mode Open Collector Output / High Voltage
- HT : Push-Pull Output / High Voltage
- D : Line Driver Output
- WT : Push-Pull Output / Wide Voltage(10～2500P/R)

Signals — 2M : AB90° Phase Difference + Index Signal

Hollow Shaft Diameter
- 8 : φ 8
- ※9525 : φ 9.525
- 10 : φ 10

※ Option

Cable Length
- 050 : 500mm (Standard)
- 100 : 1000mm
- 300 : 3000mm

- No Indication: Other than D output
- No Indication: D output with LS
- C : D output with C-MOS

Complying with RoHS

External Dimension

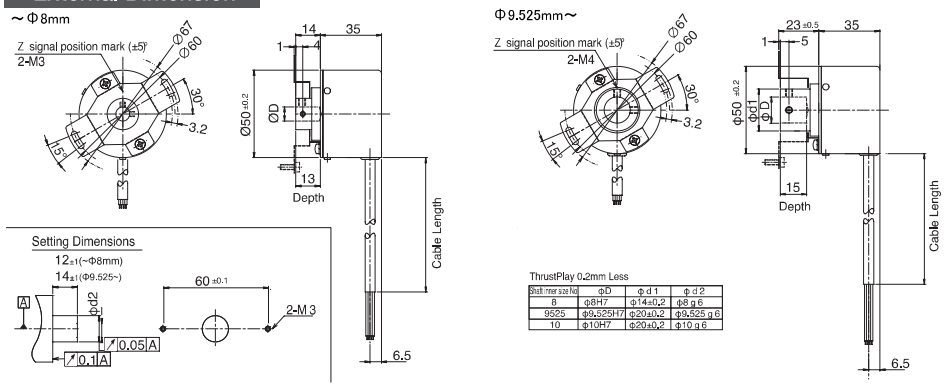

ThrustPlay 0.2mm Less

Shaft Diameter size No	ΦD	Φ d 1	Φ d 2
8	φ8H7	φ14±0.2	φ8 g 6
9525	φ9.525H7	φ20±0.2	φ9.525 g 6
10	φ10H7	φ20±0.2	φ10 g 6

Electrical Connections

2M / 2MC / 2MHC / 2MHCP / 2MHT / 2MWT	Color	Signal
	Red	Power Supply(Vcc)
	Black	0V
	Green or Blue	Signal A
	White	Signal B
	Yellow	Signal Z
	Shield	F·G

2MD	Color	Signal	Color	Signal
	Red	Power Supply(Vcc)	White	Signal B
	Black	0V	Gray	Signal B̄
	Green	Signal A	Yellow	Signal Z
	Blue	Signal Ā	Orange	Signal Z̄
	Shield	F·G		

Electrical Spec

※1) at Maximum Sink Current ※2) Maximum Source Current

TYPE		2M	2MC	2MHC	2MHCP	2MHT	2MD	2MWT
Power Supply(Vcc)		DC4.5～13.2 V		DC10.8 ~ 26.4 V			DC4.5～5.5V (C-MOS)	DC 4.75～30V
Current Consumption		90 mA Max	70 mA Max		100 mAMax	90 mA Max	70 mA Max (C-MOS)	60 mA Max
Output Voltage	"H"	Vcc-1V Min	———		Vcc-1V Min ※2	Vcc-3V Min	2.5 V Min	Vcc-2.5V Min
	"L" ※1	0.5 V Max			———	3 V Max	0.5 V Max	0.4 V Max
Maximum Sink Current		20 mA				40 mA	20 mA	30 mA
Rise & Fall Time		1 μs Max					200 ns Max	3 μs Max
Maximum Frequency Response		200 kHz			50 kHz	200 kHz		100 kHz
Withstanding Voltage of Output Tr.		———	50 V Max		———			

Wave Form

CW → Rotating Toward Clockwise Viewed from an Arrow

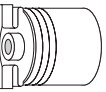

Rising point of A-Signal is always at one point while Z-Signal is at H-Level in CW.

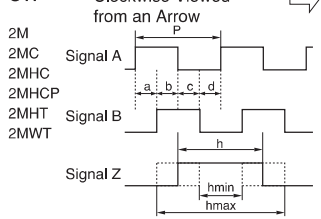

$P = \frac{1}{\text{Resolution}}$

$a, b, c, d = \frac{P}{4} \pm \frac{P}{8}$ $\quad \frac{P}{2} \leqq h \leqq \frac{3P}{2}$

Wave Ratio (Duty); 50 ± 25 (%)

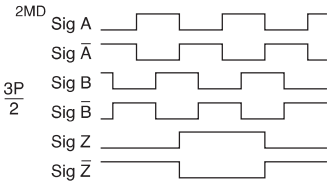

Output Circuit

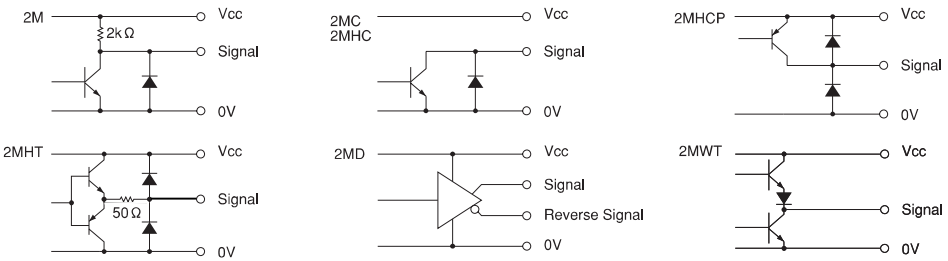

Mechanical Spec

Starting Torque		9.8×10^{-4}N・m Max
Angular Acceleration		1×10^{5} rad/s^2
Shaft Loading	Thrust	49N
	Radial	78.4N
Moment of Inertia		3×10^{-6}kg・m^2
Maximum Permissible Speed		5000min^{-1}
Net Weight		200g Max

Environmental Spec

Operating Temperature	−10°C～+70°C
Storage Temperature	−30°C～+85°C
Humidity	RH 85% Max No Condensation
Vibration	10～55 Hz / 1.5mm X,Y,Z Each 2h
Shock	980m/s^2,11ms X, Y, Z Each 3 times
Ingress Protection	IP50